TOTO
ECOWASHER

ECOWASHER

TCW1211A

FEATURES

- Rear cleaning with bidet functions
- Hygienic self cleaning nozzle
- Soft closing seat and cover
- Easy remove for cleaning
- Easy Installation

SPECIFICATIONS

- Size : 380W x 533D x 105H mm
- Material : Urea Resin
- Shape : Elongated
- Water Pressure : 0.05 MPa <dynamic> - 0.75 MPa <static> *

**This is the water pressure just before entering the product.*

Recommended to Use Automatic Water Pressure Pump for -0.25 MPa Water Pressure

Recommended Water Hardness Quality < 50ppm and TDS 300 milligram/litre

PARTS DESCRIPTION

- TCW1211A : ECOWASHER with Bidet Function

MATCHING TOILET

CW822NJWS#W,CW822M#NW1,MS636CDV#XW,CW920K#XWH, CW1 92K#XWH, CW562MUNW1, CW572MUNW1

COLOURS

White (#NW1)

TCW1211A

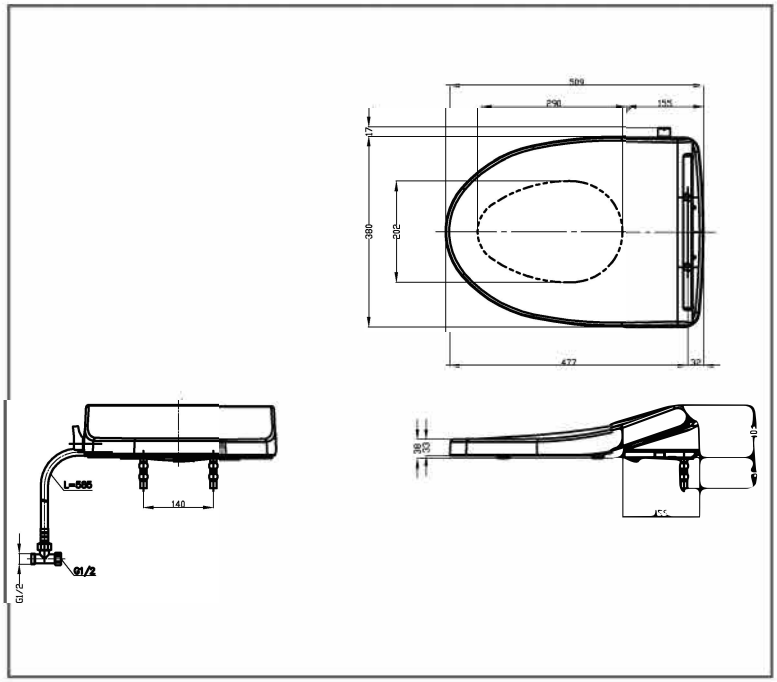

Please consult, TOTO representative for more details.
All rights reserved by TOTO including but not limited to Improve & Change of Product Design, Specs or Availability at any time without prior notice