TOTO

URINAL

Wall Hung Urinal

USWN925AE#XW/ USWN925A#XW

FEATURES

- Compact design with privacy shields.
- CEFIONTECT technology: super smooth, ion barrier glazing for a clean urinal.
- Water saving effect with powerful flushing action.
- Integral trap.
- Easy and flexible installation.
- E-WATER+ type available.

SPECIFICATIONS

• Water Use	:	0.5L
• Water Pressure	:	0.25MPa ~ 0.75MPa
• Size	:	380W x 400D x 590H mm

PARTS DESCRIPTION

• USWN925AE#XW	:	Wall Hung Urinal with Built in Sensor (AC Type)
• USWN925A#XW	:	Wall Hung Wind with Built in sensor (DC Type)

COLORS

White

USWN925AE#XW/ USWN925A#XW

USWN925AS
USWN925AE

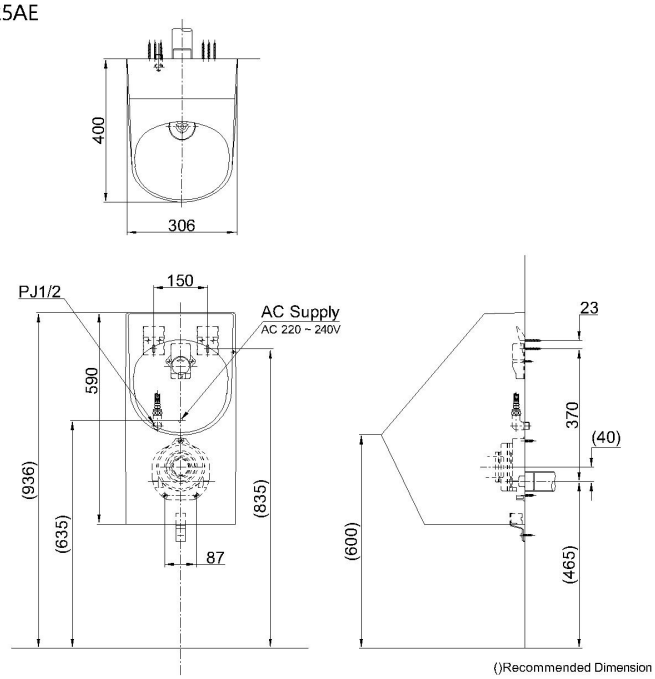

Please consult, TOTO representative for more details.

All rights reserved by TOTO including but not limited to Improve & Change of Product Design, Specs or Availability at any time without prior notice