TOTO

G SELECTION SHOWER FITTINGS

1 Mode Fixed Shower Head (Wall Type)

TBW08001A

FEATURES

- 1 mode function with Square shape over head shower (Comfort Wave)
- Safety with anti-drop mechanism

SPECIFICATIONS

• Finish	:	Chrome
• Water Pressure	:	0.25 Mpa ~ 0.75 Mpa
• Dimension	:	200mm X 200mm
• Shape	:	Square

PARTS DESCRIPTION

• TBW08001A	:	Over Head Shower (1 mode function with Square shape over head shower Comfort wave)

TBW08001A

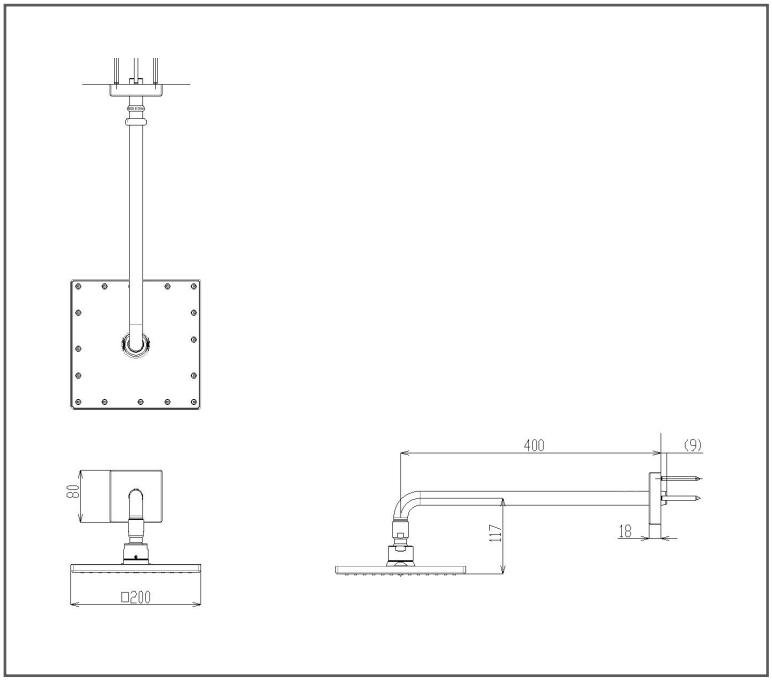

Please consult, TOTO representative for more details.
All rights reserved by TOTO including but not limited to Improve & Change of Product Design, Specs or Availability at any time without prior notice

Water Discharge Flow Rate Chart

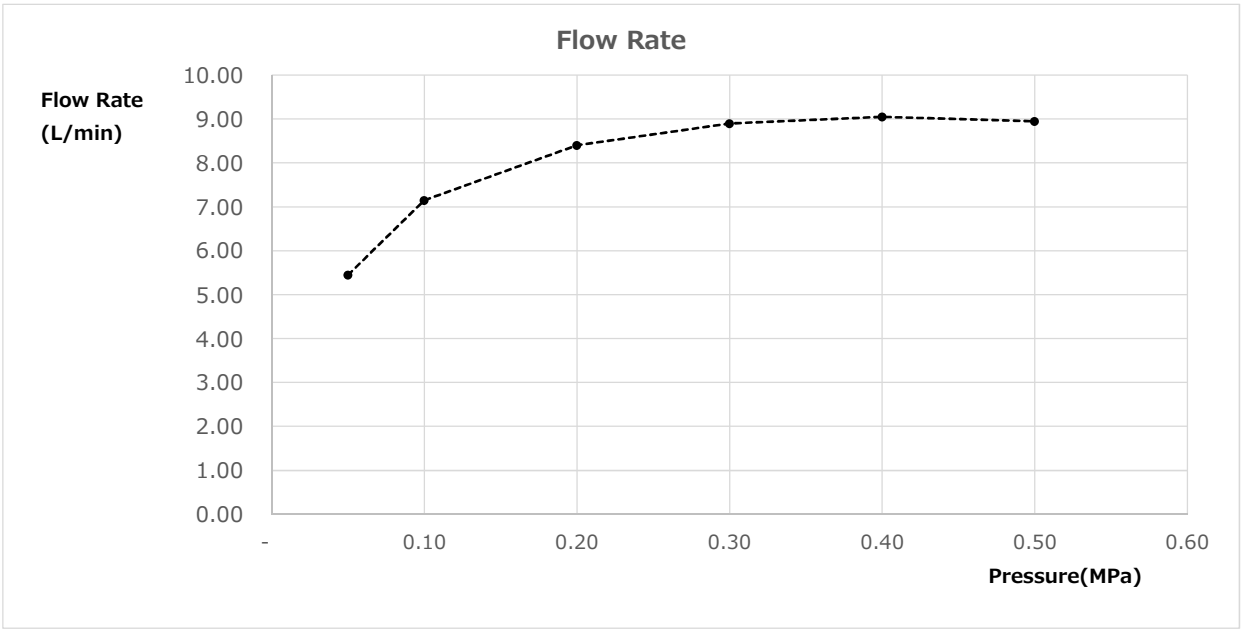

Please consult, TOTO representative for more details.

All rights reserved by TOTO including but not limited to Improve & Change of Product Design, Specs or Availability at any time without prior notice