TOTO
WASH BASIN

Wall Hung Wash Basin

LW136YWF#WH/
LW136HFY#XW

FEATURES

- Clean appearance of compact and sharp lines create a clean sanitory environment
- Matching with LT137CV

SPECIFICATIONS

• Size	: 654W x 483D x 160H mm (LW136YWF#WH)
• Size	: 200W x 290D x 295H mm (LW136HFY#XW)
• Material	: Ceramic

PARTS DESCRIPTION

• LW136YWF#WH	: Wall Hung Wash Basin
• LW136HFY#XW	: Half Pedestal
• TX801LN	: Wall Mounting Bolt

COLOURS

White

LW136YWF#WH/ LW136HFY#XW

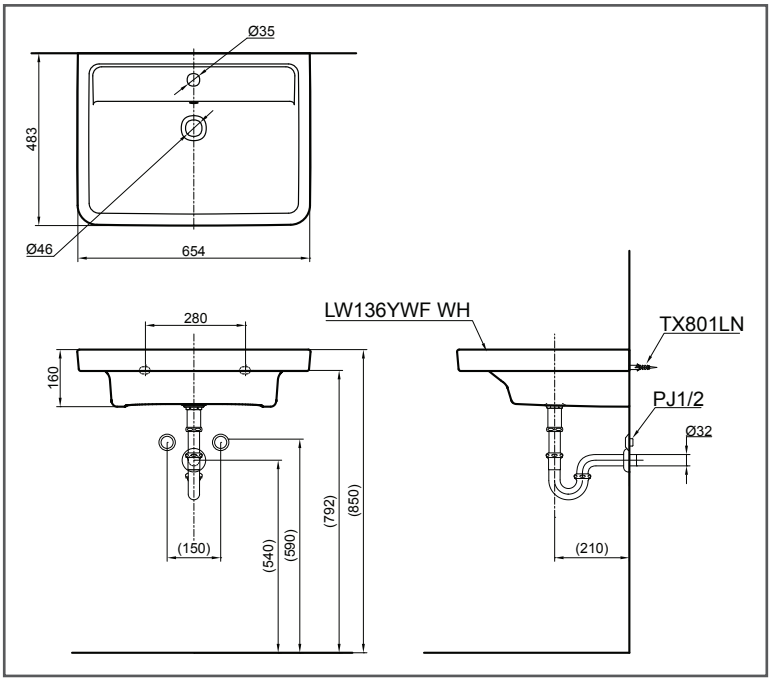

Please consult, TOTO representative for more details.

All rights reserved by TOTO including but not limited to Improve & Change of Product Design, Specs or Availability at any time without prior notice