TOTO

LN SERIES

Exposed Single Lever Shower Mixer

TBS02301B

FEATURES

- Design Concept is Life and Nostalgia.
- TOTO original cartridge for smooth control.
- High corrosion resistance plating.

SPECIFICATIONS

• Water Pressure	:	0.25Mpa ~ 0.75Mpa
• Finish	:	Chrome
• Material	:	Brass
• Size	:	166W x 135D x 85H mm

PARTS DESCRIPTION

• TBS02301B	:	Exposed Single Lever Shower Mixer

TBS02301B

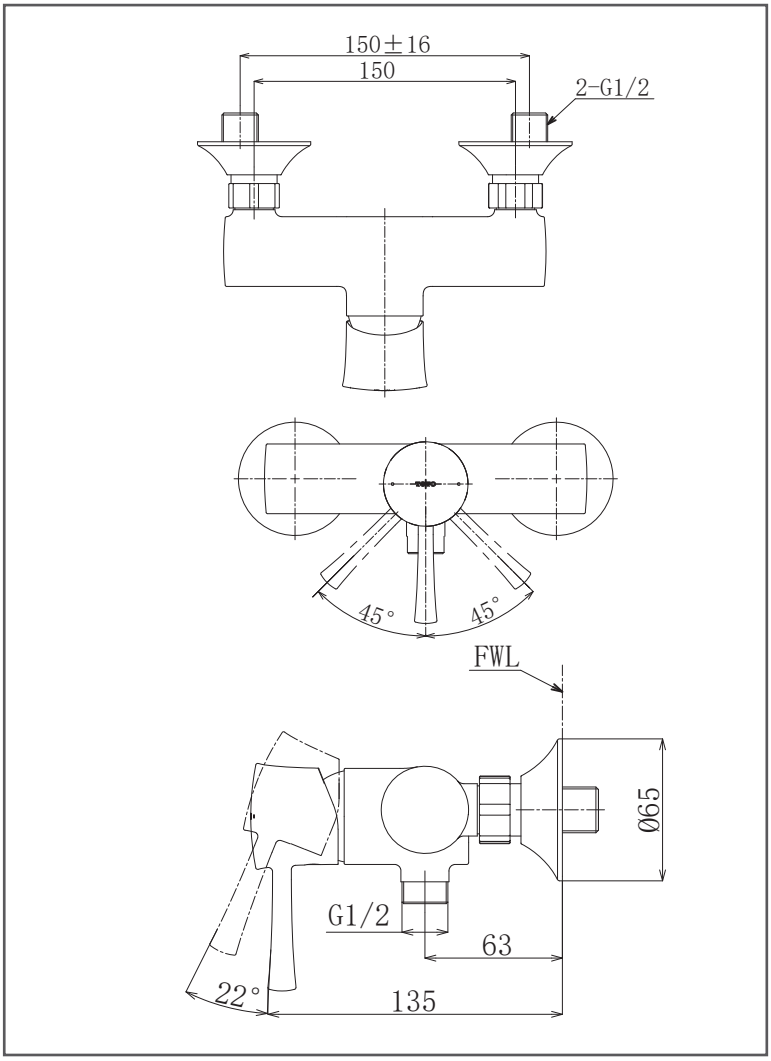

Please consult, TOTO representative for more details.
All rights reserved by TOTO including but not limited to Improve & Change of Product Design, Specs or Availability at any time without prior notice

Flow Rate

TBS02301B

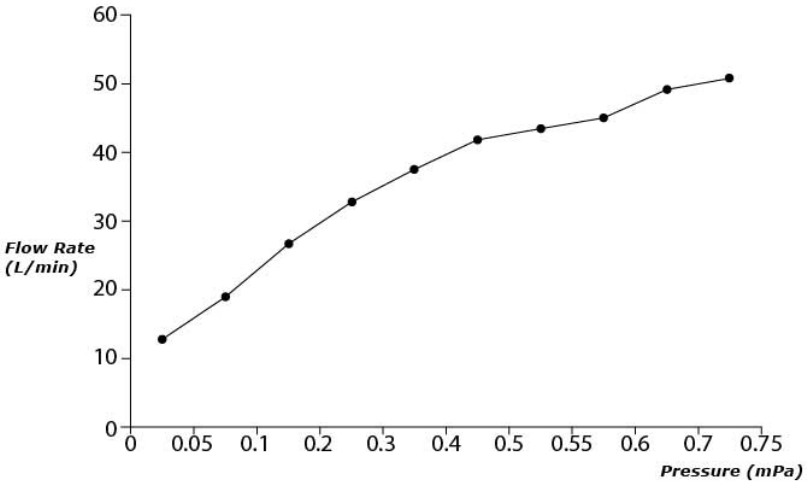

Please consult, TOTO representative for more details.
All rights reserved by TOTO including but not limited to Improve & Change of Product Design, Specs or Availability at any time without prior notice