TOTO
GO Series

Single Lever Washbasin Faucet

TLG01304B

reddot award 2017
winner

FEATURES

- Design Concept is Gorgeous and Organic.
- Long lasting, COMFORT GLIDE mechanism for a smooth operation
- High corrosion resistance plating
- TOTO aerated water technology, ECOCAP adds air to the water to achieve full water jet with less amount of water usage.

SPECIFICATIONS

• Size	:	45W x 124D x 239H mm
• Material	:	Brass
• Water Pressure	:	0.25Mpa ~ 0.75Mpa
• Finish	:	Chrome

PARTS DESCRIPTION

• TLG01304B	:	Single Lever Washbasin Faucet (w/ pop-up waste) (Semi tall vessel)

TLG01304B

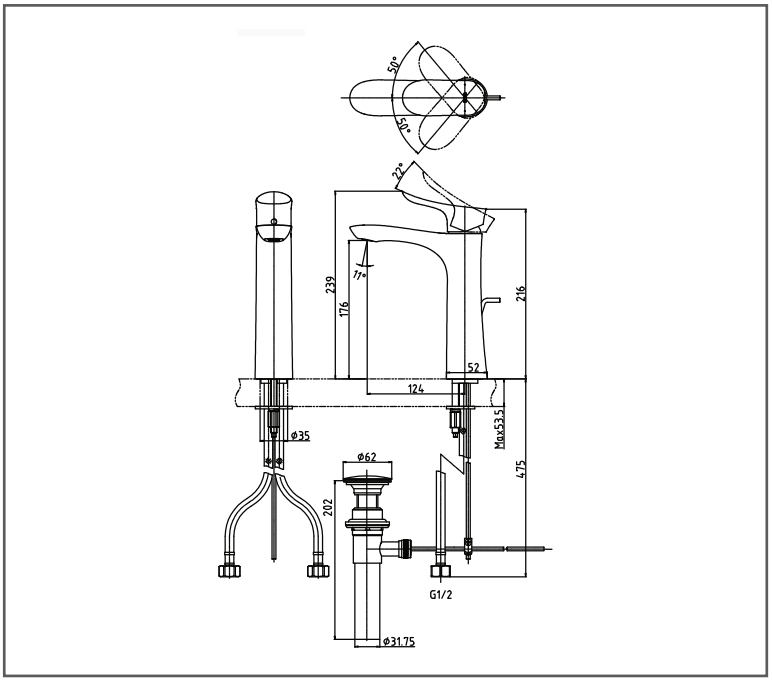

Please consult, TOTO representative for more details.

All rights reserved by TOTO including but not limited to Improve & Change of Product Design, Specs or Availability at any time without prior notice

Flow Rate

TLG01304B

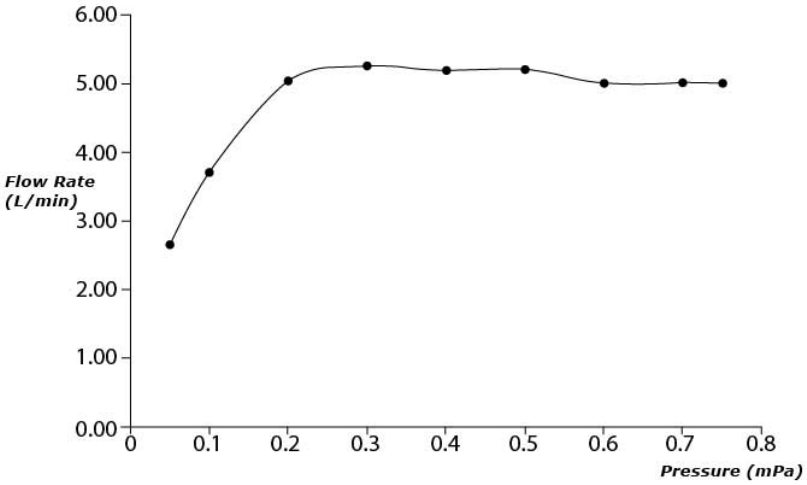

Please consult, TOTO representative for more details.
All rights reserved by TOTO including but not limited to Improve & Change of Product Design, Specs or Availability at any time without prior notice