# TOTO Faucets

**GF SERIES**

## TLG11308BA

## FEATURES

- Refined cylinder with fine finished inspire a high-end luxury feel
- Delicate workmanship develop a hairline and polished finish that generates a rich contrast in textures that provide delightful feel to the touch
- Easy Installation and Usage
- Long lasting, COMFORT GLIDE mechanism for a smooth operation

## SPECIFICATIONS

| | | |
|---|---|---|
| Finish | : | Chrome |
| Material | : | Brass |
| Water Pressure | : | 0.25MPa~0.75MPa |

## PARTS DESCRIPTION

| | | |
|---|---|---|
| TLG11308BA | : | Wall Mount Single Lever Washbasin Faucet (Long Spout) (w/o Waste Fittings) |

*TLG11308BA*

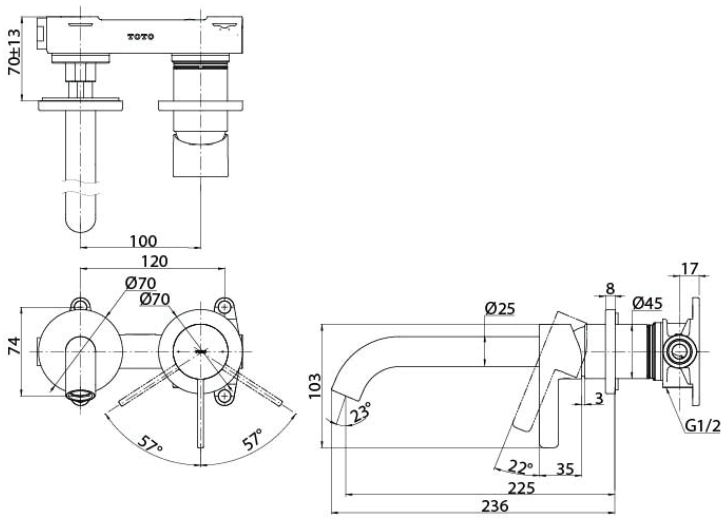


*(Recommended Dimensions)*

Please consult TOTO representative for more details.
All rights reserved by TOTO including but not limited to Improve & Change of Product Design, Specs or Availability at any time without prior notice.