TOTO
WASH BASIN

Reinforced Marble Console Wash Basin

PJS04WE#MGB

FEATURES

- Stone appearance with dense texture gives you a natural feeling
- Galaline series promise a clean, beautiful and smooth quality
- Two color options available: Sand Yellow gives you a passion like a sandy beach while, obsidian black gives you a deep feeling like the night
- Front Overflow

SPECIFICATIONS

- Size : 450W x 450D x 160H mm
- Material : Reinforced Marble

PARTS DESCRIPTION

Faucet not included

- PJS04W#MGB : Reinforced Marble Console Wash Basin

COLOURS

PJS04WE#MGB : Obsidian Black

PJS04WE#MGB

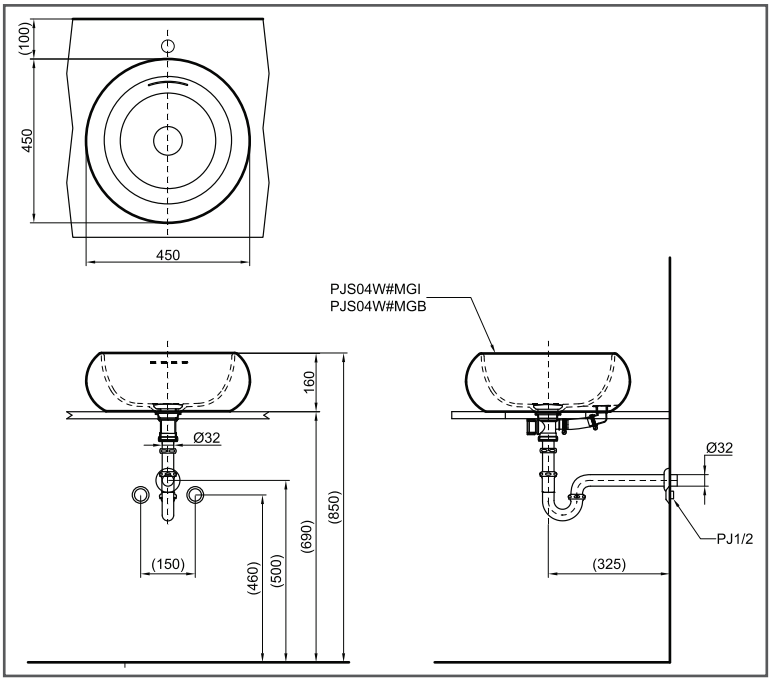

Please consult, TOTO representative for more details.
All rights reserved by TOTO including but not limited to Improve & Change of Product Design, Specs or Availability at any time without prior notice