TOTO Toilet

SP Wall-Hung Toilet

CW522EMUNW1/ TCF804C2IN#NW1

FEATURES

- CEFIONTECT Technology: super smooth,ion barrier glazing for a clean toilet bowl
- TORNADO FLUSH for powerful flushing with less amount of water
- RIMLESS DESIGN bowl ensures easy cleaning and ultimate hygiene
- EWATER+ keeps nozzle and bowl clean with sanitizing effect against bacteria
- Fully equipped with rear, front and oscillating & pulsating cleansing function
- Temperature control HEATED SEAT
- PREMIST a fine spray of mist making it difficult for dirt to adhere
- Auto lid opening and closing
- EWATER+ is made from tap water by electrolyzed chloride ion. After use, it returns back to ordinary state of water

SPECIFICATIONS

- Water Use : 4.5/3L
- Bowl Shape : Square
- Flush System : TORNADO FLUSH
- Rough-in : 220 mm
- Size : 380W x 580D x 335H mm

PARTS DESCRIPTION

- CW522EMUNW1 : Square shape Wall-Hung Toilet
- TCF804C2IN#NW1 : WASHLET SW
- TX215C : Slip in connector
- WH172AT : Flush Tank

COLOURS

White

CW522EMUNW1/TCF804C2IN#NW1

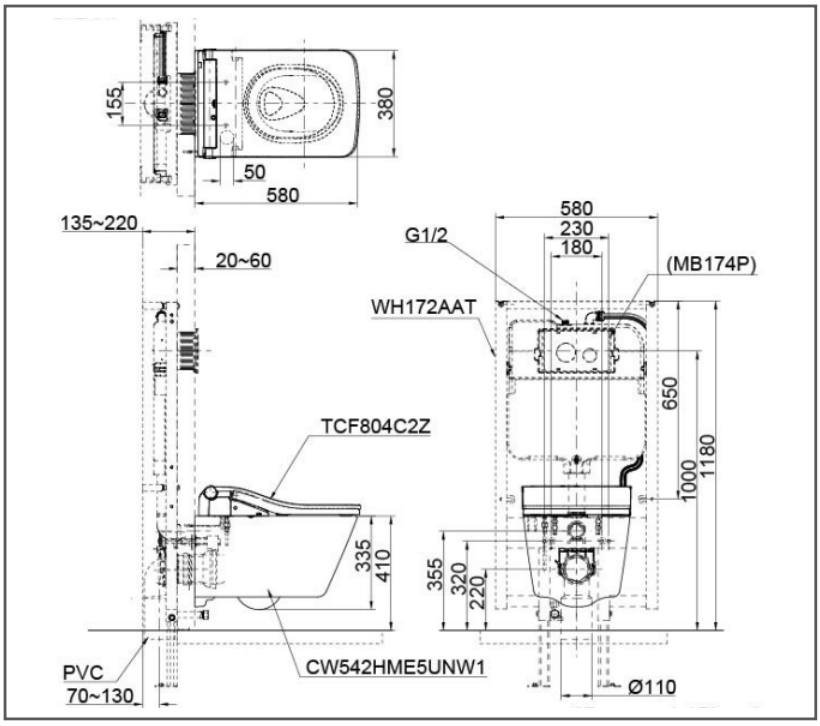

Please consult, TOTO representative for more details.

All rights reserved by TOTO including but not limited to Improve & Change of Product Design, Specs or Availability at any time without prior notice