TOTO

WASH BASIN

Console Wash Basin

L4704E#MGR

reddot winner 2020

FEATURES

- Its beautiful design that uses the ceramic natural roundness with ultra-thin frame
- Deliberately off-balance design expresses a distinctive sense of comfort
- Reminiscent of handwork produces a distorted shape that conveys a free form curve design resisting numerical specification
- Front side Overflow

SPECIFICATIONS

• Size	:	460W x 420D x 177H mm
• Material	:	Vitreous China
• Shape	:	Oval

PARTS DESCRIPTION

L4704E#MGR	:	Console Wash Basin

COLOURS

Matte Grey

L4704E#MGR

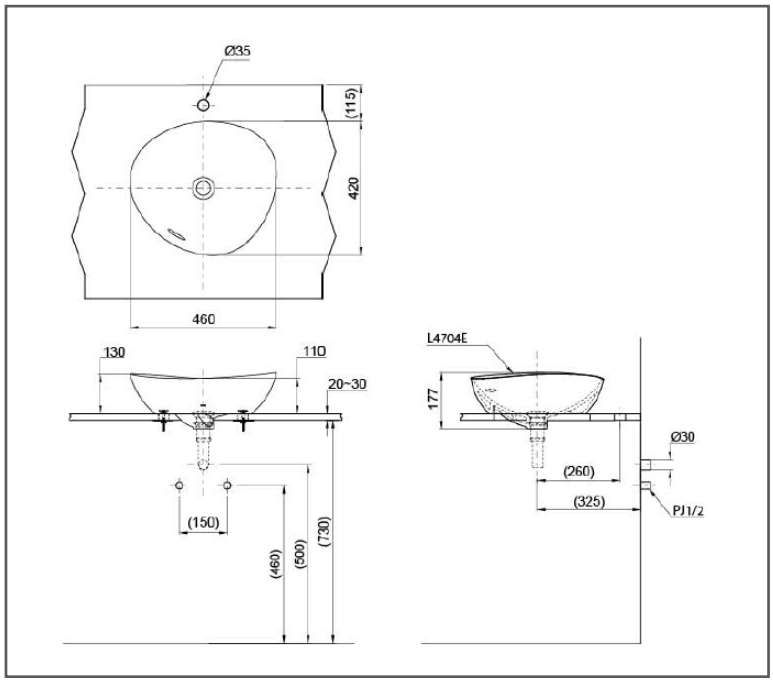

Please consult, TOTO representative for more details.
All rights reserved by TOTO including but not limited to Improve & Change of Product Design, Specs or Availability at any time without prior notice