TOTO

WASH BASIN

Console Wash Basin

L4716RE#MBL

DESIGN AWARD 2017

FEATURES

- A sharp linear design that matches modern architectural spaces
- Front side Overflow

SPECIFICATIONS

• Size	:	600W X 380D X 70H mm
• Material	:	Ceramic
• Shape	:	Rectangular

PARTS DESCRIPTION

• L4716RE#MBL	:	Console Wash Basin
• VM5D419#MBL	:	Pop up waste set recommended for Wash Basin Faucets Series: ZA, GE, GC, GM, GB & GF
• VM5D417#MBL	:	Pop up waste set recommended for Wash Basin Faucets Series: GA, GO, GR, GS, LB, LN, LC & LF

COLOURS

Matte Black

L4716RE#MBL

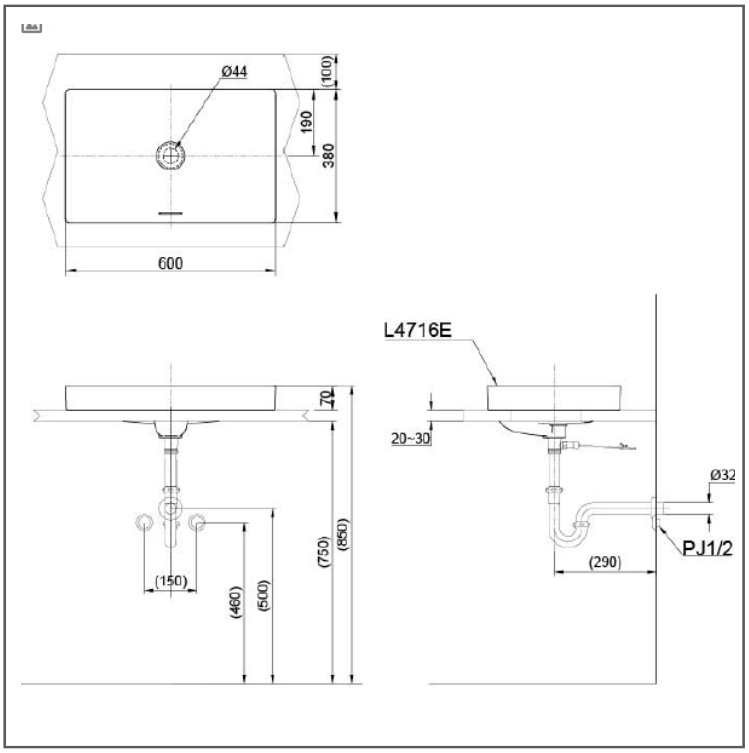

Please consult, TOTO representative for more details.
All rights reserved by TOTO including but not limited to Improve & Change of Product Design, Specs or Availability at any time without prior notice